INSTALLATION INSTRUCTION
SPORT BAR FOR 07 HYUNDAI SANTA FE
PRAT#7543

NOTICE:

λ The figures here are for reference only and may have differences with the actual product you received, however they share the same assembly way.

λ Please read the instruction completely for easy installation, which will also help you to avoid scratches or other potential damages to your car.

λ Please periodically check and retighten all the hardware and clean for a refresh look.

FUNCTION AND FEATURES:

λ Installation is very easy, it is no need to drill the holes under the car, just install it with the holes which already under the car.

λ The grille guard joints tightly with car, beautiful shape, good decoration effect.

PART LIST:

No.	Name	Qty	Remarks	No.	Name	Qty	Remarks
①	Main body	1		⑦	Lock washer	2	14mm
②	L-Mount bracket	1		⑧	Hex bolt	2	M8×35
③	R-Mount bracket	1		⑨	Hex bolt	2	M8×60
④	Spacer	2		⑩	Flat washer	6	8mm
⑤	Hex bolt	2	M14×35	⑪	Lock washer	4	8mm
⑥	Flat washer	2	14mm				

PARTS PIC

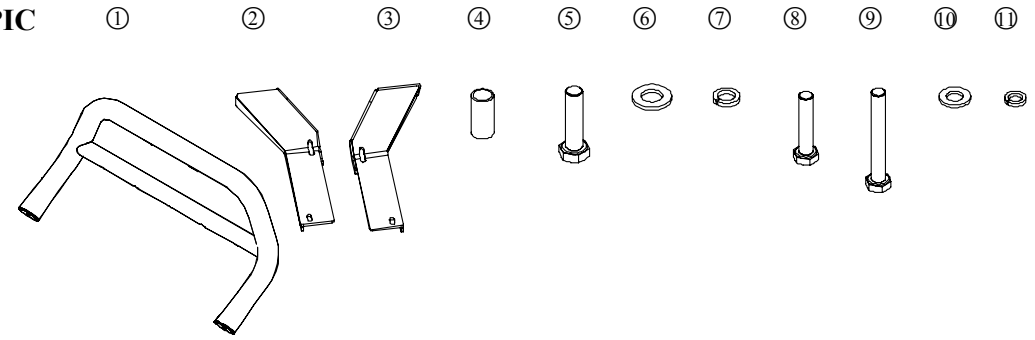

INSTALLATION STEPS

Step1. Check whether you get all the parts according to the chart (Parts pic).
Step2. Install the②、③as the picture shown using ④、⑧、⑨、⑩、⑪.

INSTALLATION INSTRUCTION
SPORT BAR FOR 07 HYUNDAI SANTA FE
PRAT#7543

Step3. Install the① to the mounting brackets as shown in the picture, using the⑤、⑥、⑦. Adjust to keep alignment and tighten all hardware.

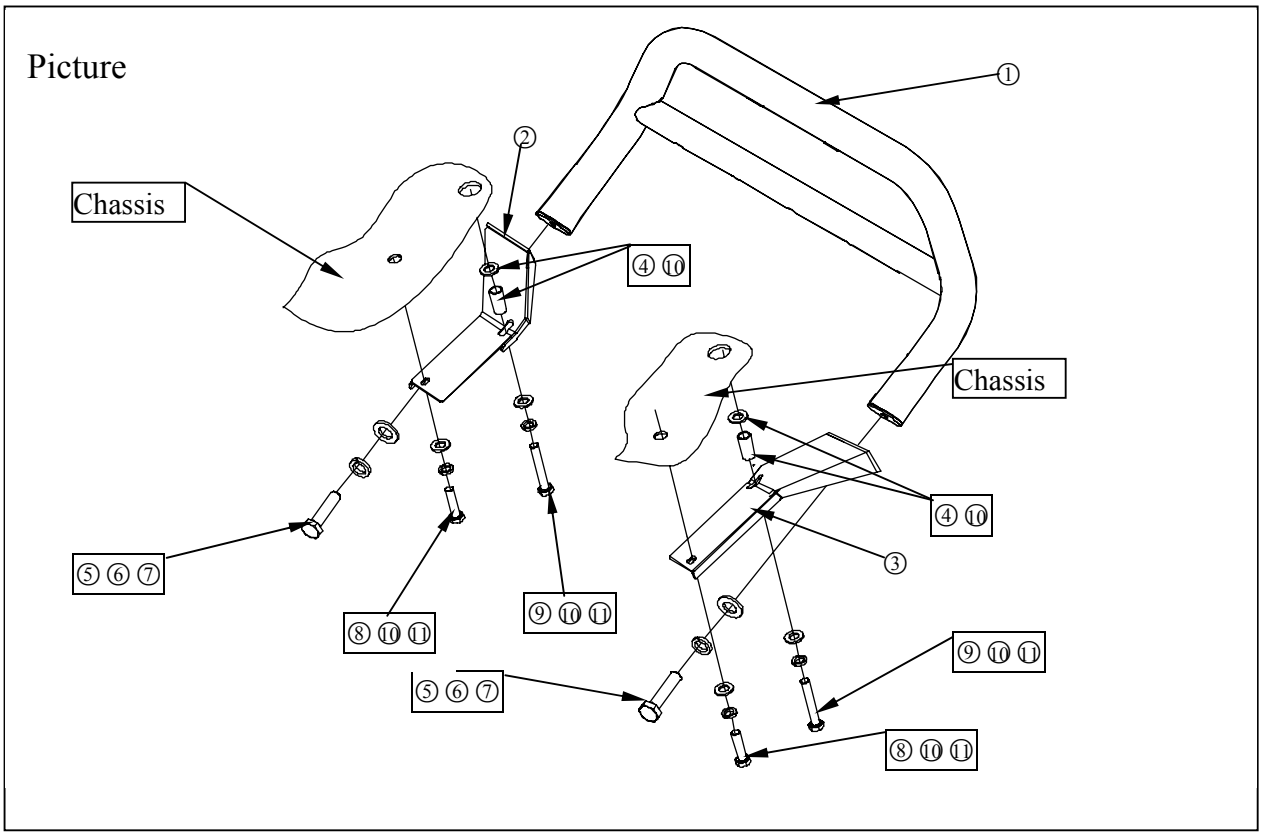

Step4. Verify that all the hardware was installed and tighten all hardware.
Step5. Easy installation finished.